LPC47N207

LPC Super I/O IrDA Hot Docking Chip with UART

PRODUCT FEATURES

Data Brief

- 3.3 Volt Operation (5V tolerant)
- Programmable Wakeup Event Interface (IO_PME# Pin)
- SMI Support (IO_SMI# Pin)
- GPIOs (16)
  - Programmable internal pull-up resistors
- Two IRQ Input Pins
- XNOR Chain
- PC99a and ACPI 1.0 Compliant
- 64 PIN STQFP Lead-free RoHS Compliant Package
- Intelligent Auto Power Management
- One Full Function Serial Port
  - High Speed 16C550A Compatible UARTs with Send/Receive 16-Byte FIFOs
  - Supports 230k and 460k Baud
  - Programmable Baud Rate Generator
  - Modem Control Circuitry
- Infrared Communications Controller
  - IrDA v1.2 (4Mbps), HPSIR, ASKIR, Consumer IR Support
  - 2 IR Ports
  - 96 Base I/O Address, 15 IRQ Options and 3 DMA Options
- LPC Bus Host Interface
  - Multiplexed Command, Address and Data Bus
  - 8-Bit I/O Transfers
  - 8-Bit DMA Transfers
  - 16-Bit Address Qualification
  - Serial IRQ Interface Compatible with Serialized IRQ Support for PCI Systems
  - PCI nCLKRUN Support
  - Power Management Event (IO_PME#) Interface Pin
- LPC PortSwitch™ Interface
  - Secondary Switchable LPC Interface (3.3V only)
  - Buffered 14 MHz output
  - Switched PCI Clock output

ORDER NUMBER:

LPC47N207-JV FOR 64 PIN, STQFP LEAD-FREE ROHS COMPLIANT PACKAGE

80 ARKAY DRIVE, HAUPPAUGE, NY 11788 (631) 435-6000, FAX (631) 273-3123

Copyright © 2008 SMSC or its subsidiaries. All rights reserved.

Circuit diagrams and other information relating to SMSC products are included as a means of illustrating typical applications. Consequently, complete information sufficient for construction purposes is not necessarily given. Although the information has been checked and is believed to be accurate, no responsibility is assumed for inaccuracies. SMSC reserves the right to make changes to specifications and product descriptions at any time without notice. Contact your local SMSC sales office to obtain the latest specifications before placing your product order. The provision of this information does not convey to the purchaser of the described semiconductor devices any licenses under any patent rights or other intellectual property rights of SMSC or others. All sales are expressly conditional on your agreement to the terms and conditions of the most recently dated version of SMSC's standard Terms of Sale Agreement dated before the date of your order (the "Terms of Sale Agreement"). The product may contain design defects or errors known as anomalies which may cause the product's functions to deviate from published specifications. Anomaly sheets are available upon request. SMSC products are not designed, intended, authorized or warranted for use in any life support or other application where product failure could cause or contribute to personal injury or severe property damage. Any and all such uses without prior written approval of an Officer of SMSC and further testing and/or modification will be fully at the risk of the customer. Copies of this document or other SMSC literature, as well as the Terms of Sale Agreement, may be obtained by visiting SMSC's website at http://www.smsc.com. SMSC is a registered trademark of Standard Microsystems Corporation ("SMSC"). Product names and company names are the trademarks of their respective holders.

SMSC DISCLAIMS AND EXCLUDES ANY AND ALL WARRANTIES, INCLUDING WITHOUT LIMITATION ANY AND ALL IMPLIED WARRANTIES OF MERCHANTABILITY, FITNESS FOR A PARTICULAR PURPOSE, TITLE, AND AGAINST INFRINGEMENT AND THE LIKE, AND ANY AND ALL WARRANTIES ARISING FROM ANY COURSE OF DEALING OR USAGE OF TRADE. IN NO EVENT SHALL SMSC BE LIABLE FOR ANY DIRECT, INCIDENTAL, INDIRECT, SPECIAL, PUNITIVE, OR CONSEQUENTIAL DAMAGES; OR FOR LOST DATA, PROFITS, SAVINGS OR REVENUES OF ANY KIND; REGARDLESS OF THE FORM OF ACTION, WHETHER BASED ON CONTRACT; TORT; NEGLIGENCE OF SMSC OR OTHERS; STRICT LIABILITY; BREACH OF WARRANTY; OR OTHERWISE; WHETHER OR NOT ANY REMEDY OF BUYER IS HELD TO HAVE FAILED OF ITS ESSENTIAL PURPOSE, AND WHETHER OR NOT SMSC HAS BEEN ADVISED OF THE POSSIBILITY OF SUCH DAMAGES.

General Description

The SMSC LPC47N207 is a 3.3V PC 99 and ACPI 1.0 compliant Super I/O Controller. The LPC47N207 implements the LPC interface with the LPC PortSwitch™ Interface. The LPC PortSwitch™ Interface is a hot-switchable external Docking LPC interface. The LPC47N207 also features a full 16-bit internally decoded address bus, a Serial IRQ interface with PCI nCLKRUN support, relocatable configuration ports and three DMA channel options. The part also includes 16 GPIO pins.

The LPC47N207 incorporates one 8-pin 16C550A compatible UART. In addition, the LPC47N207 provides a second UART to support a Serial Infrared Interface that complies with IrDA v1.2 (Fast IR), HPSIR, and ASKIR formats (used by Sharp and other PDAs), as well as Consumer IR.

The LPC47N207 incorporates sophisticated power control circuitry (PCC). The PCC supports multiple low power down modes. The LPC47N207 also features Software Configurable Logic (SCL) for ease of use. SCL allows programmable system configuration of key functions such as the UARTs.

The LPC47N207 supports the ISA Plug-and-Play Standard register set (Version 1.0a) and provides the recommended functionality to support Windows '9x, 2K, ME, XP and PC99. The I/O Address, DMA Channel and Hardware IRQ of each device in the LPC47N207 may be reprogrammed through the internal configuration registers. There are 192 I/O address location options, a Serialized IRQ interface, and three DMA channels.

Block Diagram

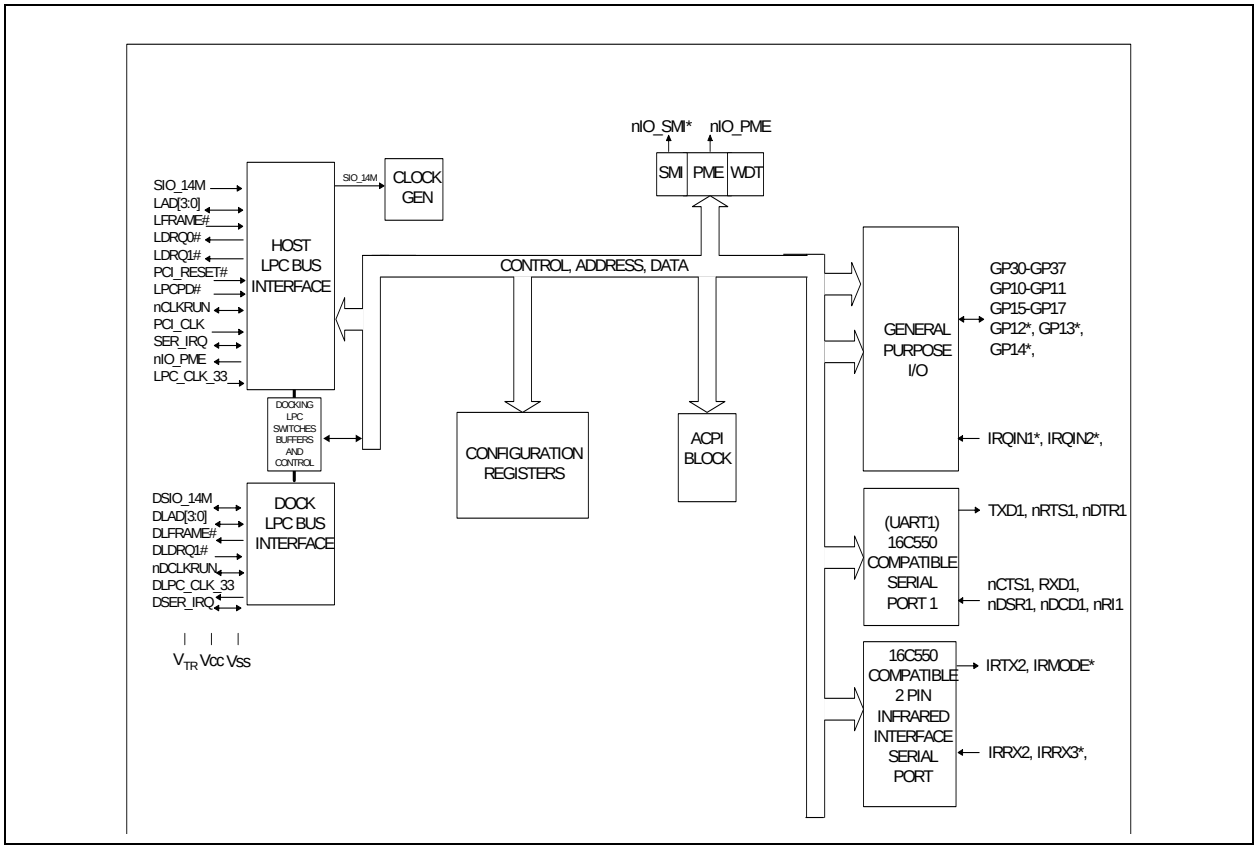

Figure 1 Block Diagram

Package Outline

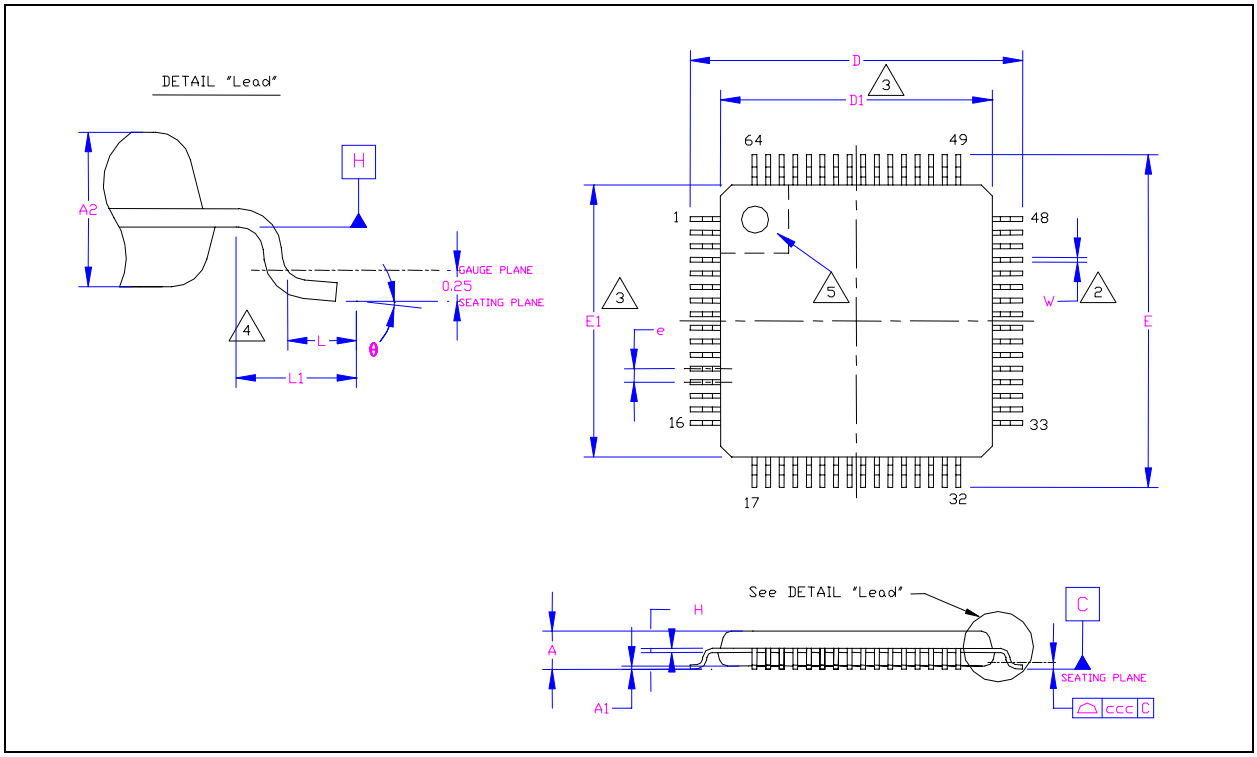

Figure 2 64-pin STQFP Package Outline

Table 1 64-pin STQFP Package Parameters

	MIN	NOMINAL	MAX	REMARKS
A	~	~	1.60	Overall Package Height
A1	0.05	~	0.15	Standoff
A2	1.35	1.40	1.45	Body Thickness
D	8.80	9.00	9.20	X Span
D1	6.80	7.00	7.20	X body Size
E	8.80	9.00	9.20	Y Span
E1	6.80	7.00	7.20	Y body Size
H	0.09	~	0.20	Lead Frame Thickness
L	0.45	0.60	0.75	Lead Foot Length
L1	~	1.00 REF.	~	Lead Length
e	0.40 Basic			Lead Pitch
∂	0°	~	7°	Lead Foot Angle
W	0.13	0.18	0.23	Lead Width
ccc	~	~	0.08	Coplanarity

Notes:

1. Controlling Unit: millimeter.
2. Tolerance on the true position of the leads is ± 0.035 mm maximum.
3. Package body dimensions D1 and E1 do not include the mold protrusion.
4. Maximum mold protrusion is 0.25 mm per side. D1 and E1 dimensions determined at datum plane H.
5. Dimension for foot length L measured at the gauge plane 0.25 mm above the seating plane.
6. Details of pin 1 identifier are optional but must be located within the zone indicated.